One of the earliest optical MEMS devices used the electrostatic deflection of an array of cantilever beams in combination with a galvo scanner to form a projection display system. The cantilever beams where metal-coated silicon dioxide, but they could also be formed in polysilicon.

The electrostatic deflection of a cantilever beam, which is shown in Fig. 1, will be derived in the following way.

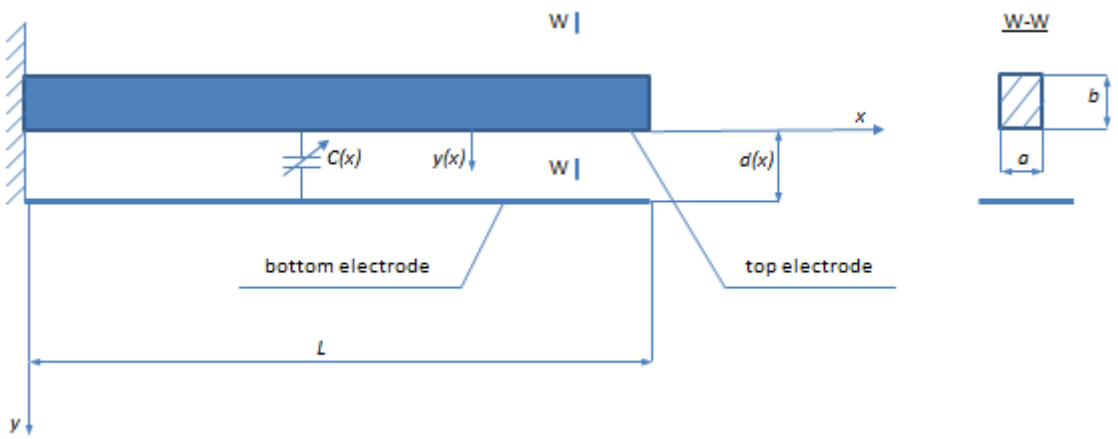

Fig. 1 The electrostatic cantilever beam

The deflection of the cantilever beam of width *a* and length *L* due to point load *F* acting on the end of a beam was found to be:

$$y(x) = \frac{Fx^2}{6EI}(3L - x), \tag{1.1}$$

where *EI* denotes the bending stiffness and *x* is the coordinate measured along the beam length. The moment of inertia of the beam cross-section is equal to:

$$I = \frac{ab^3}{12}, \tag{1.2}$$

where dimensions *a* and *b* are given in Fig. 1. If we consider a normalized point force $q(x)=F(x)/A$ acting on a small segment of the cantilever beam *adx* at the position *x*, the infinitesimal deflection *dy* is equal to:

$$dy = \frac{x^2}{6EI}(3L - x)dF = \frac{x^2}{6EI}(3L - x)q(x)wdx. \tag{1.3}$$

For an electrostatic force on the cantilever with an initial gap d_0, the force would be:

$$F(x) = \frac{\varepsilon_0 A}{2}\frac{V^2}{(d_0 - d(x))^2}, \tag{1.4}$$

where ε_0=8.85 pF/m is the vacuum dielectric permittivity, *A* denotes the area of the electrode and *d*(*x*) is the gap at the position *x* due to the applied voltage *V*. The normalized point force *q*(*x*) is then equal to:

$$q(x)=\frac{F(x)}{A}=\frac{\varepsilon_0}{2}\frac{V^2}{\left(d_0-d(x)\right)^2}. \tag{1.5}$$

The total tip deflection can be found from integrating the incremental deflection along the length of the cantilever beam:

$$y(L)=\int_0^L \frac{x^2}{6EI}(3L-x)q(x)adx=\frac{\varepsilon_0 aV^2}{12EI}\int_0^L \frac{x^2(3L-x)}{\left(d_0-d(x)\right)^2}dx. \tag{1.6}$$

To solve the equation (1.6) in closed form, it can be assumed a parabolic approximation for the gap *d*(*x*) as a function of the tip deflection *y*(*L*):

$$d(x)\approx\left(\frac{x}{L}\right)^2 y(L), \tag{1.7}$$

then:

$$y(L)\approx\frac{\varepsilon_0 aV^2}{12EI}\int_0^L \frac{x^2(3L-x)}{\left(d_0-\left(\frac{x}{L}\right)^2 y(L)\right)^2}dx, \tag{1.8}$$

which can be solved for *y*(*L*). The convenient form of the equation (1.8) is presented below, where the tip deflection $y(L)=f_{max}$ and (1.2) was taken into account:

$$\frac{Eb^3}{\varepsilon_0 V^2}f_{\max}-\int_0^L \frac{x^2(3L-x)}{\left(d_0-\left(\frac{x}{L}\right)^2 f_{\max}\right)^2}dx=0 \tag{1.9}$$

The equation (1.9) has two solutions f_{max}. One of them is stable and the second one is unstable. It can be proved that the smaller solution is stable.

The main parameter of the electrostatic MEMS devices is the so called pull-in voltage. This voltage is the maximum dc voltage that can be applied to the parallel plate transducer without entering into the unstable region. Physically, when the pull-in point is reached, the mechanical elastic force can no longer counter the electrostatic force and the beam touch the bottom electrode. Consequently, at voltages above the pull-in voltage, equation (1.9) has no stable solutions. To find the pull-in voltage V_{pi}, equation (1.9) must be solved for the stable solution which is equal to the unstable one, in this case. The value of the voltage *V,* for which the solution is still stable and double, is equal to the pull-in voltage V_{pi}.

The integral in (1.9) can be calculated analytically for the quadratic gap approximation, which is given by (1.7). The MATLAB Symbolic Math Toolbox allows to perform the integration by the following code:

```
syms x L d0 fmax % the symbolic variables definition
integrand=(x^2*(3*L-x))/(d0-((x/L)^2)*fmax)^2 % the definition of the
integrand
integral=int(integrand,x) % integration with respect to the variable x
z1=subs(integral,x,L) % substitution the upper integration limit
z2=subs(integral,x,0) % substitution the lower integration limit
z=z1-z2 % the value of the integral in (1.9)
```

The variable *z* stores the value of the integral and this variable is also the function of the unknown tip deflection f_{max}. The symbolic variable *z* can be transform into the MATLAB function by using the following command:

```
matlabFunction(z,'file','int_value')
```

The new file is created and it contains the function "int_value" with the input variables L, d_0, f_{max} and the output z, which is equal to value of the integral for a given input. Now, the equation (1.9) can be solved, hence the following function must be defined:

```
function [value_rhs]=fun(x)
% x denotes the unknown tip deflection fmax
d0=…….; % the initial gap
L=……..; % the length of the beam
E=……; % the Young's modulus
b=…; % the height of the beam
eps0=8.85*10^-12; % the vacuum dielectric permeability
V=……..; % the applied voltage

z=int_value(L,d0,x); % the value of the integral in (1.9)
value_rhs=(E*b^3/(eps0*V^2)*x-z); % the left-hand-side value of the
equation (1.9)
```

The solution of the equation (1.9) can be obtained by the command:

```
fmax=fzero(@fun,x0)
```

where the initial point $x0$ belongs to the interval $(0;d_0)$. Depending on the value $x0$, it can be obtained the stable or unstable solution and then the pull-in voltage.